# 11

Electric Circuits

# 11.5

Compound Direct Current Circuits

# 11.5.1

Equivalent Resistance for Series and Parallel, as well current and voltage across each resistor

# Resistors in Series

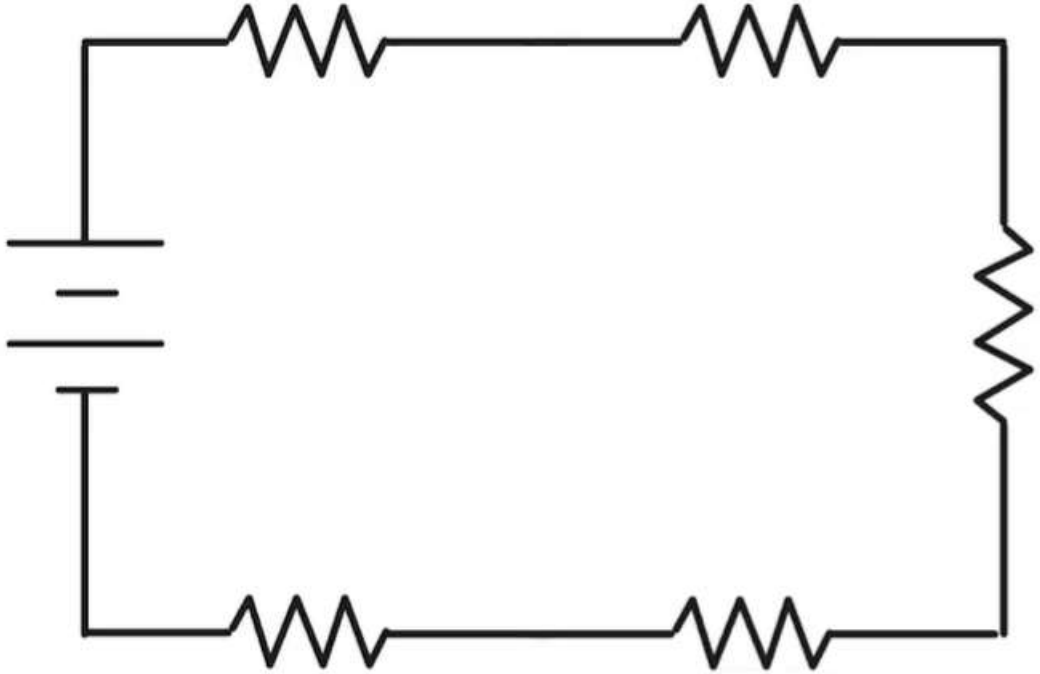

Current only has one path to travel

Current is the same for all resistors on the path

More obstacles on the path = more resistance

$$R_{eq,series} = \sum_n R_n = R_1 + R_2 + \cdots + R_n$$

# Resistors in Series

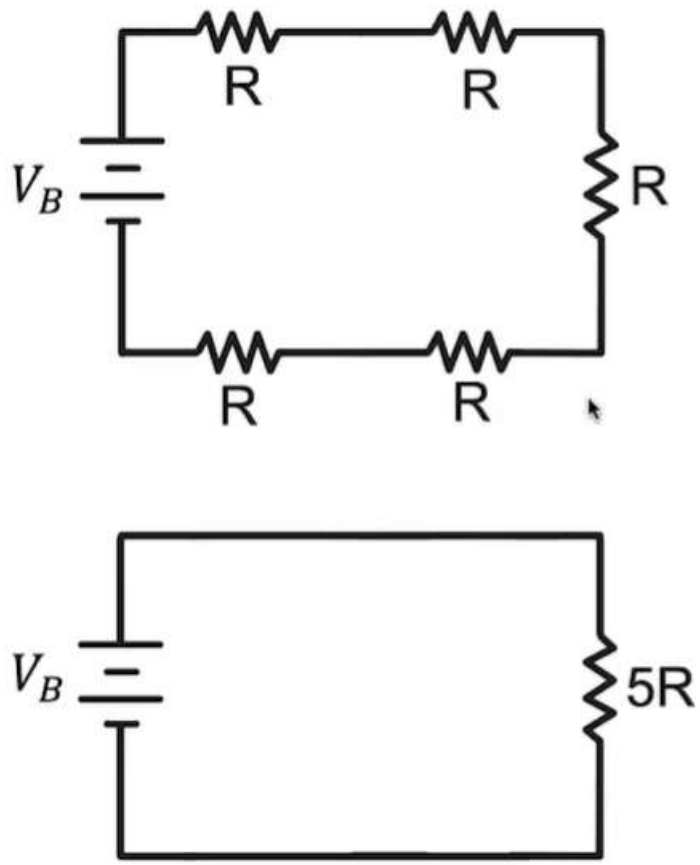

# Resistors in Series

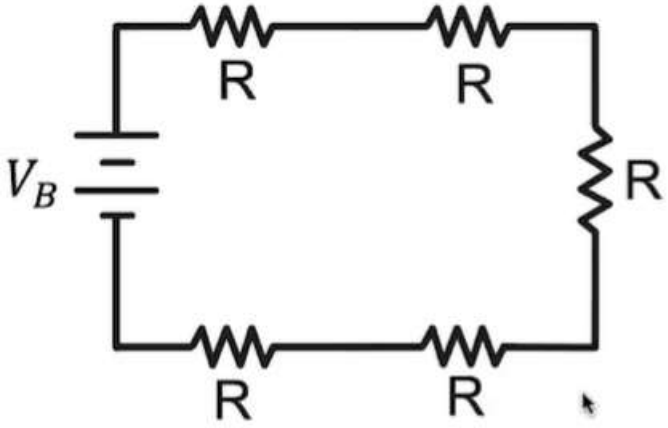


$$R_{eq,series} = \sum_n R_n = R_1 + R_2 + \cdots + R_n$$

$$R_{eq} = R + R + R + R + R$$

$$R_{eq} = 5R$$

Entire Circuit

$$\Delta V = IR$$

$$V_B = I(5R)$$

$$I_B = \frac{V_B}{5R}$$

Individual Resistors

$$\Delta V = IR$$

$$V_R = \frac{V_B}{5R}(R)$$

$$V_R = \frac{V_B}{5}$$

## Resistors in Parallel

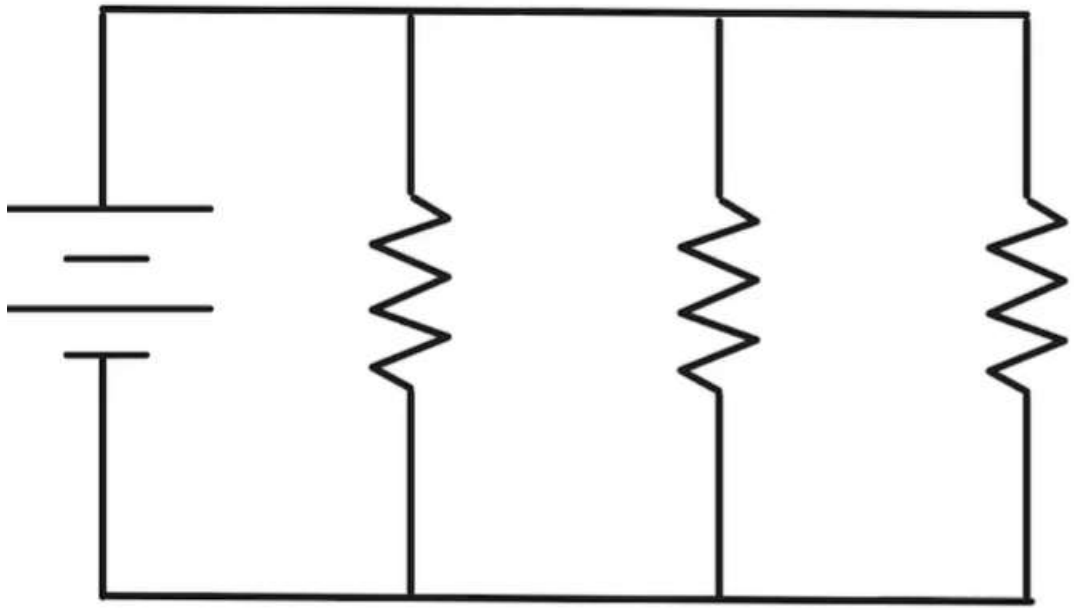

Current has multiple paths it could travel

Potential difference is the same across all resistors

More paths =
Less equivalent resistance

$$\frac{1}{R_{eq,parallel}} = \sum_n \frac{1}{R_n} = \frac{1}{R_1} + \frac{1}{R_2} + \cdots + \frac{1}{R_n}$$

# Resistors in Parallel

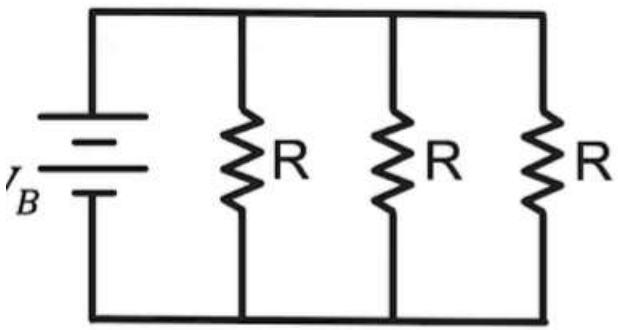

# Resistors in Parallel

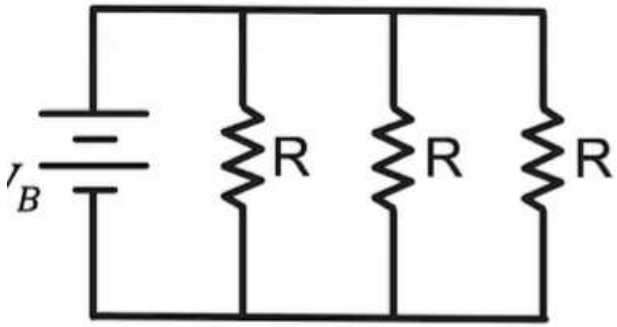


$$\frac{1}{R_{eq,parallel}} = \sum_n \frac{1}{R_n} = \frac{1}{R_1} + \frac{1}{R_2} + \cdots + \frac{1}{R_n}$$

$$\frac{1}{R_{eq}} = \frac{1}{R} + \frac{1}{R} + \frac{1}{R} = \frac{3}{R}$$

$$R_{eq} = \frac{R}{3}$$

Entire Circuit

$$\Delta V = IR$$

$$V_B = I\left(\frac{R}{3}\right)$$

$$I_B = \frac{3V_B}{R}$$

Individual Resistors

$$\Delta V = IR$$

$$I_R = \frac{V_B}{R}$$

# Resistors in Series and Parallel Combination

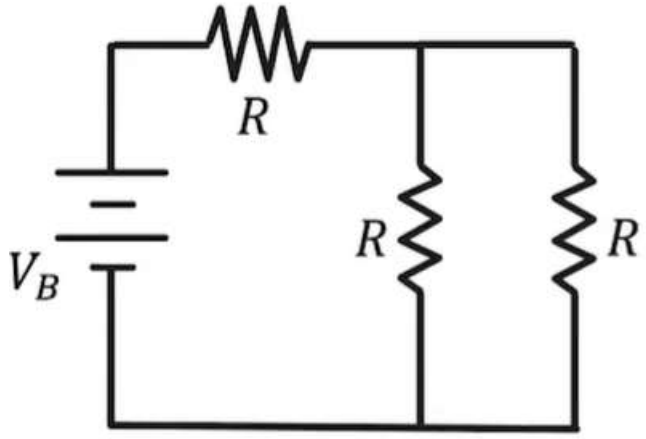

# Resistors in Series and Parallel Combination

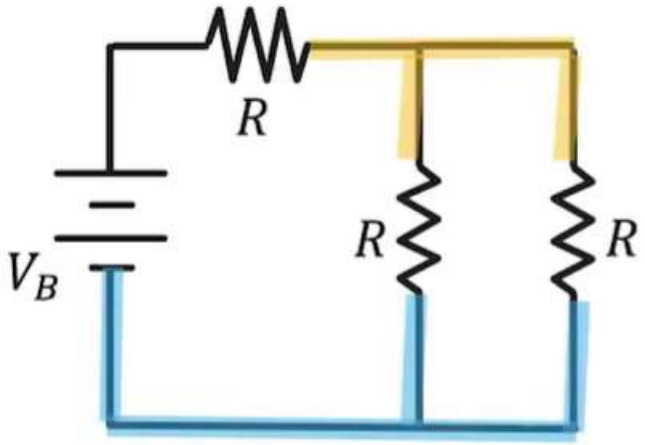


Parallel! They have the same voltage as their combo

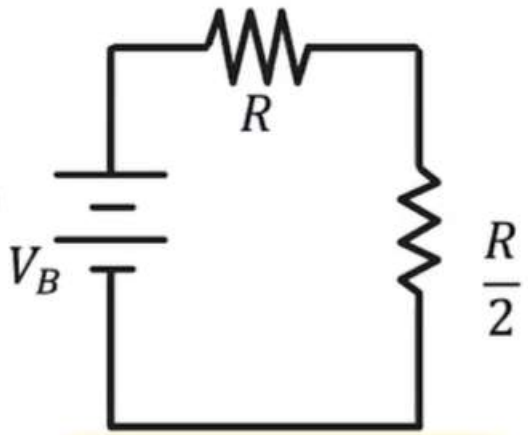


Series! They have the same current as the whole circuit

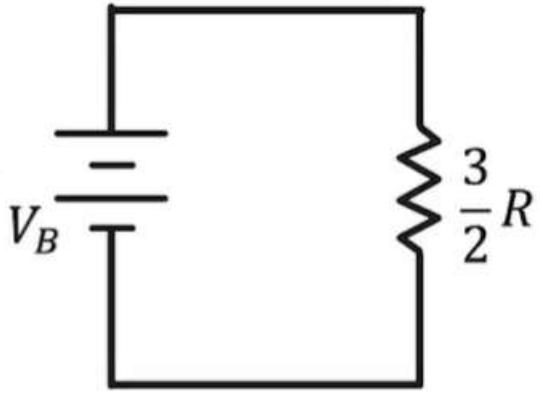


$$R_{eq} = \frac{3}{2}R$$
$$V_B = IR$$
$$I = \frac{2V_B}{3R}$$

$$V_R = \frac{2V_B}{3R}R = \boxed{\frac{2V_B}{3}}$$

$$V_{R/2} = \frac{2V_B}{3R} \cdot \frac{R}{2} = \boxed{\frac{V_B}{3}}$$

$$I = \frac{V_{R/2}}{R} = \frac{V_B}{3R}$$

# Resistors in Series and Parallel Combination

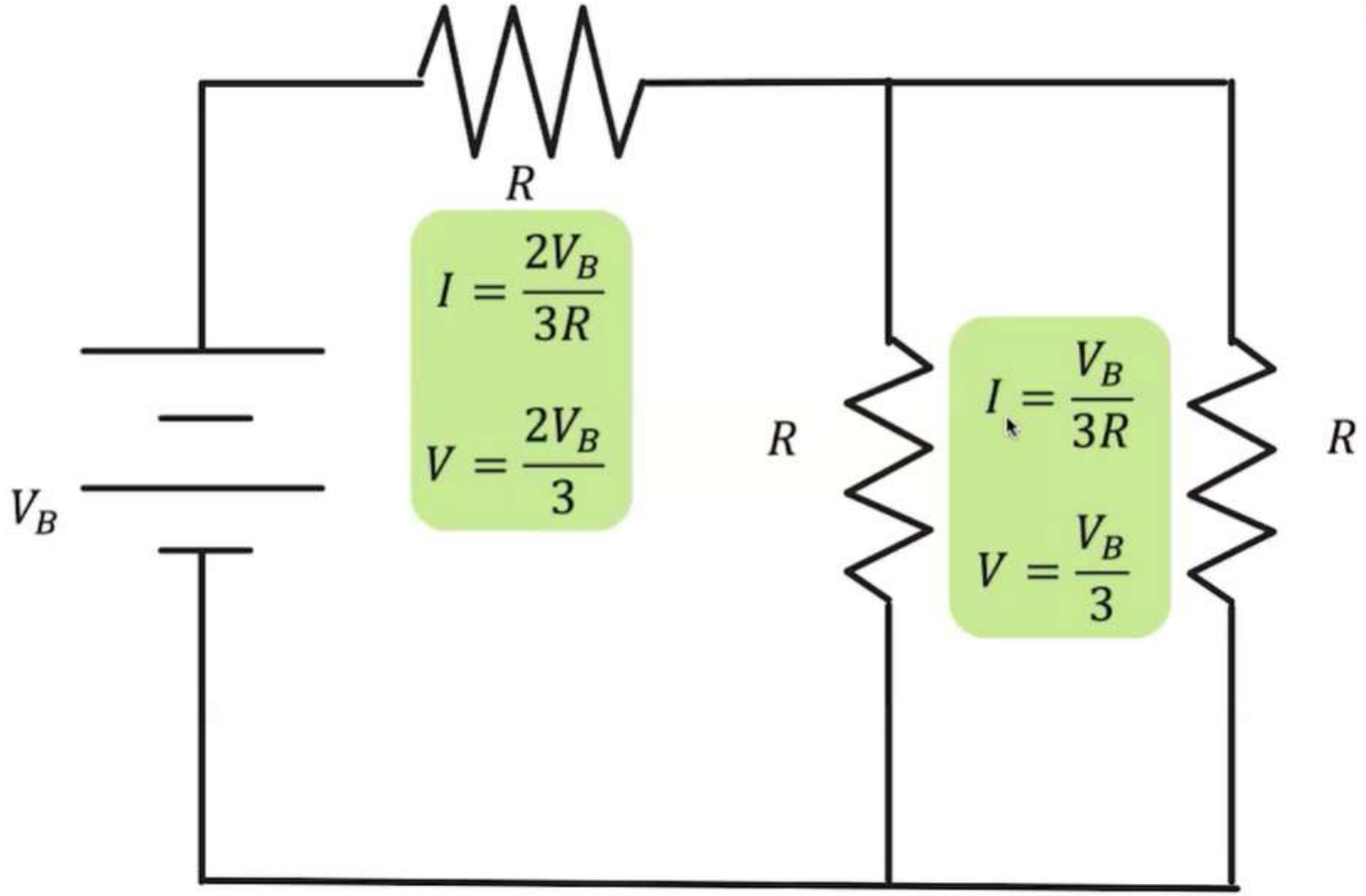

# Takeaways

## Resistors in Series

- Current only has **one** path to travel.
- Current is the same for all resistors on the path.
- More obstacles on the path = **more** resistance.

$$R_{eq,series} = \sum_n R_n = R_1 + R_2 + \cdots + R_n$$

## Resistors in Parallel

- Current has **multiple** paths it could travel.
- Potential difference is the same across all resistors in the combo.
- More paths = **Less equivalent resistance**

$$\frac{1}{R_{eq,parallel}} = \sum_n \frac{1}{R_n} = \frac{1}{R_1} + \frac{1}{R_2} + \cdots + \frac{1}{R_n}$$

# 11.5.2

Ideal vs non-ideal batteries and wires

-Their effects on circuit analysis

# Ideal Battery

Terminal Voltage is the same as EMF

EMF

$\mathcal{E}$

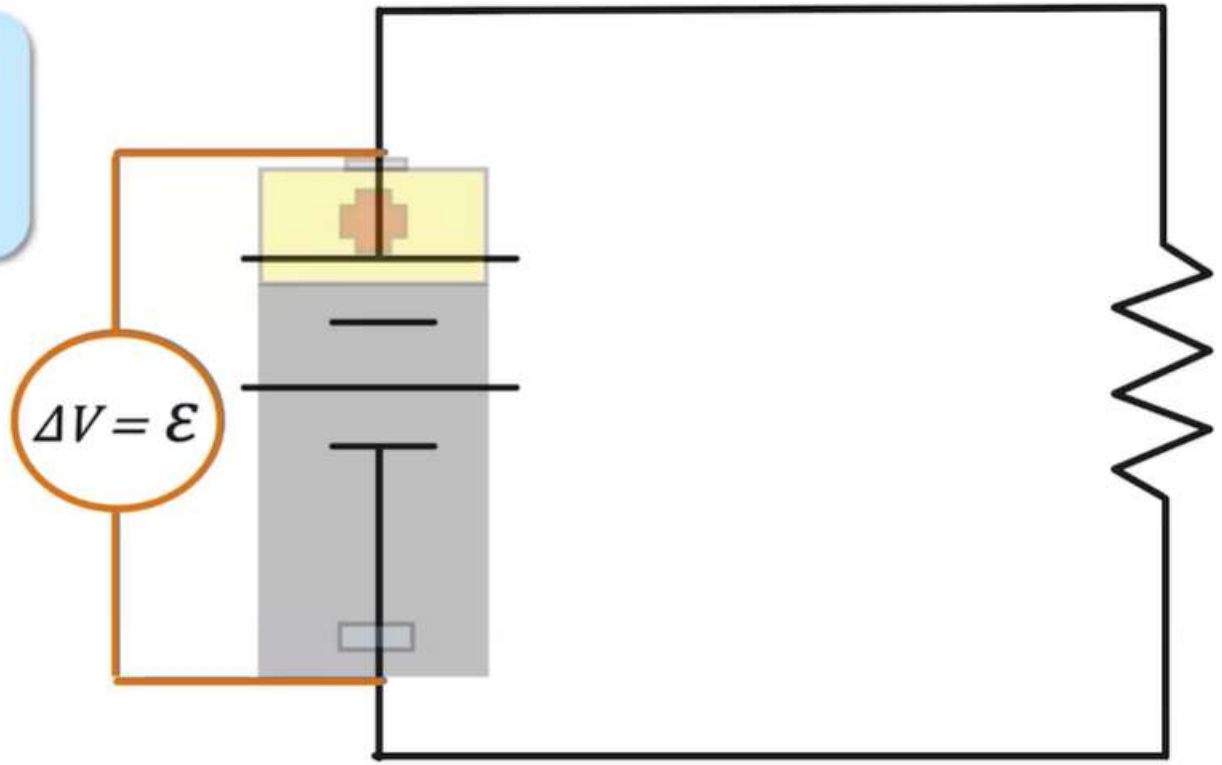

# Non-Ideal Battery

"Terminal Voltage"
$\Delta V_{Terminal} = \varepsilon - IR$

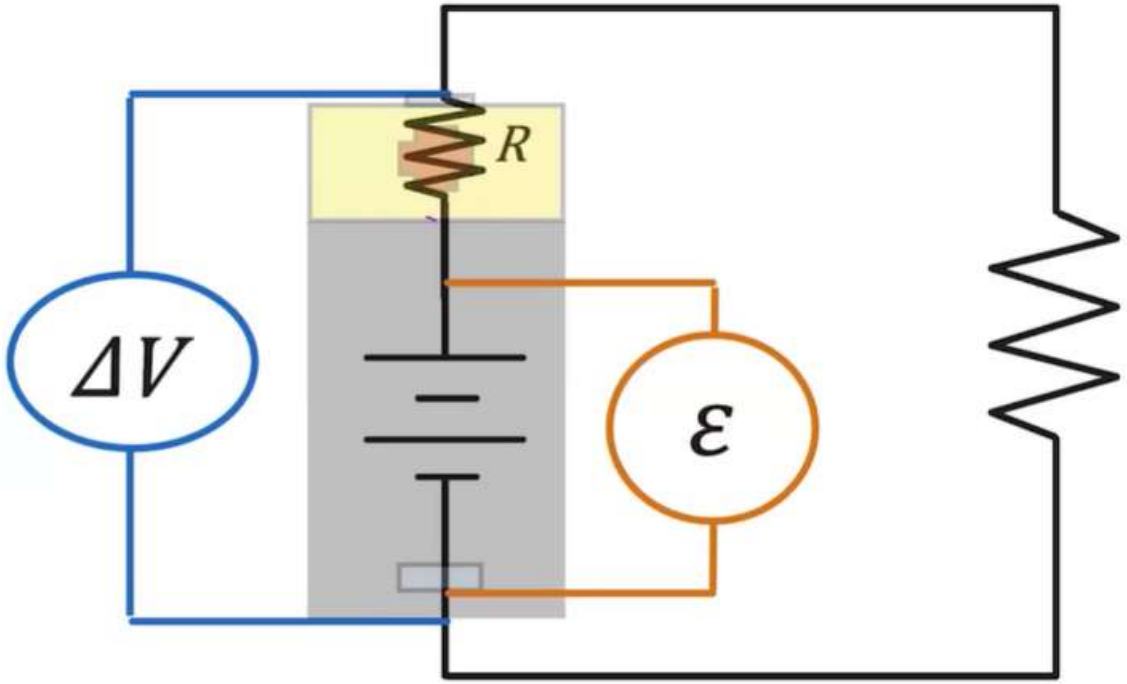


EMF
$\varepsilon$

**How can we experimentally determine if a battery is ideal?**

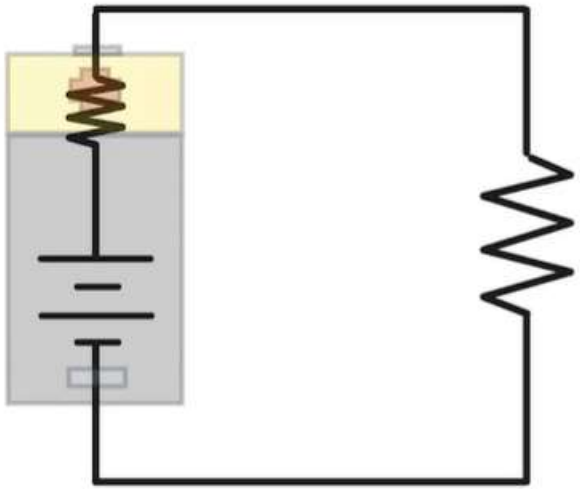

Or…

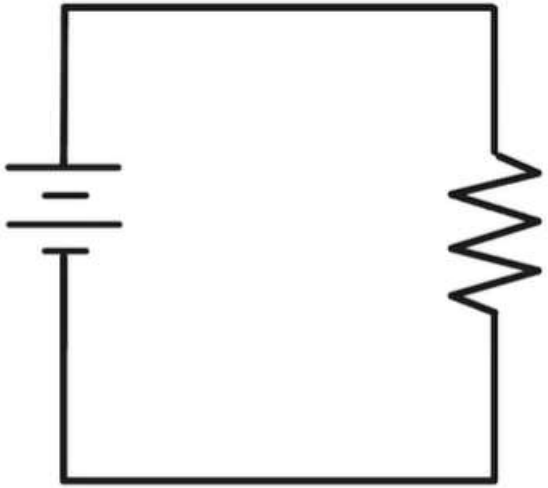

????

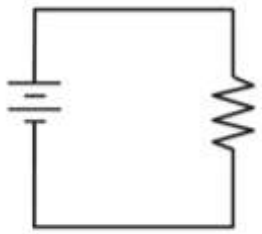

# Experiment: Does the Battery have Internal Resistance?

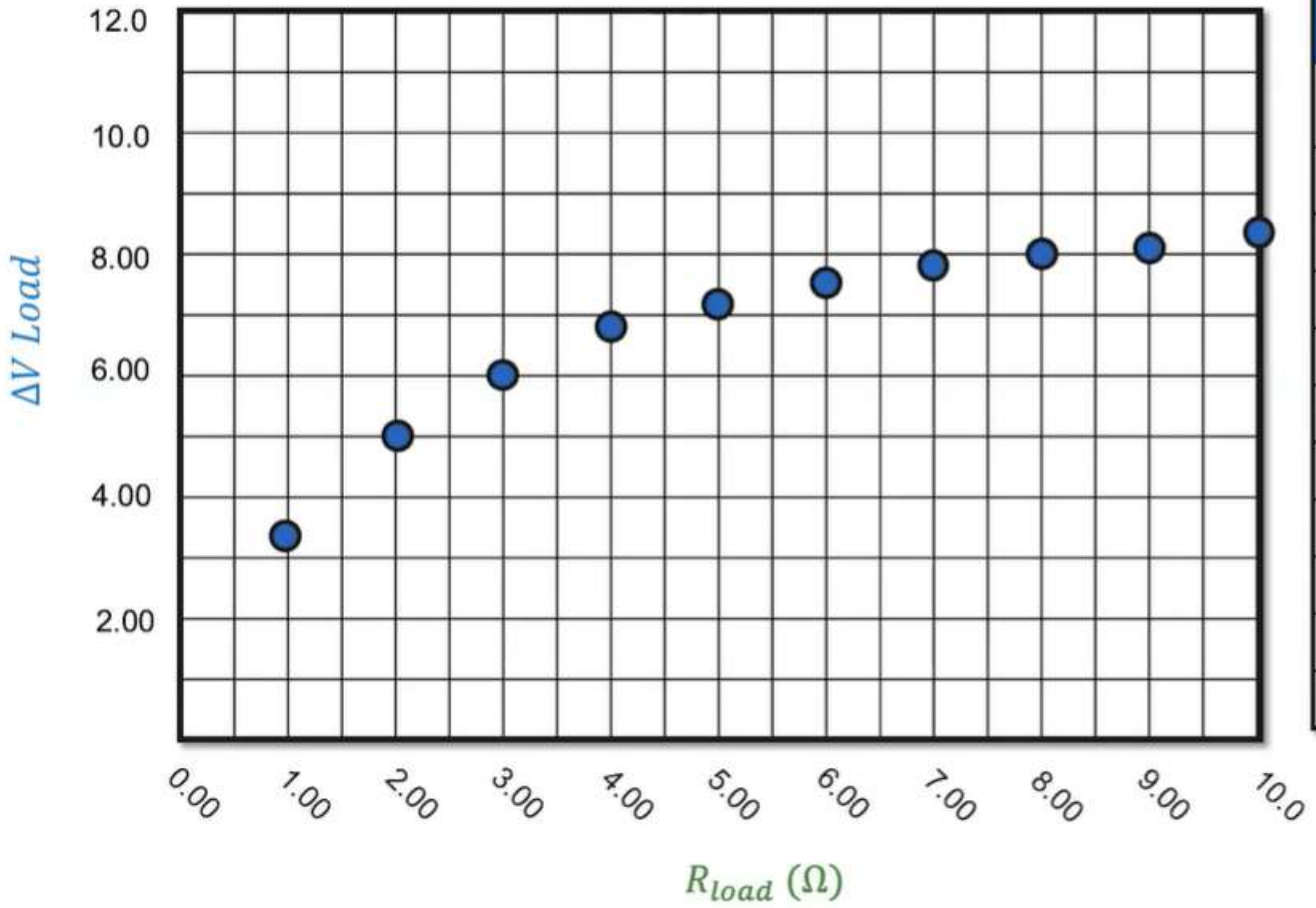


**Table**

| $R_{Load}$ | $\Delta V$ Load |
|---|---|
| 1.00 | 3.33 |
| 2.00 | 5.00 |
| 3.00 | 5.99 |
| 4.00 | 6.67 |
| 5.00 | 7.14 |
| 6.00 | 7.52 |
| 7.00 | 7.75 |
| 8.00 | 8.00 |
| 9.00 | 8.20 |
| 10.0 | 8.33 |

# Experiment: Does the Battery have Internal Resistance?

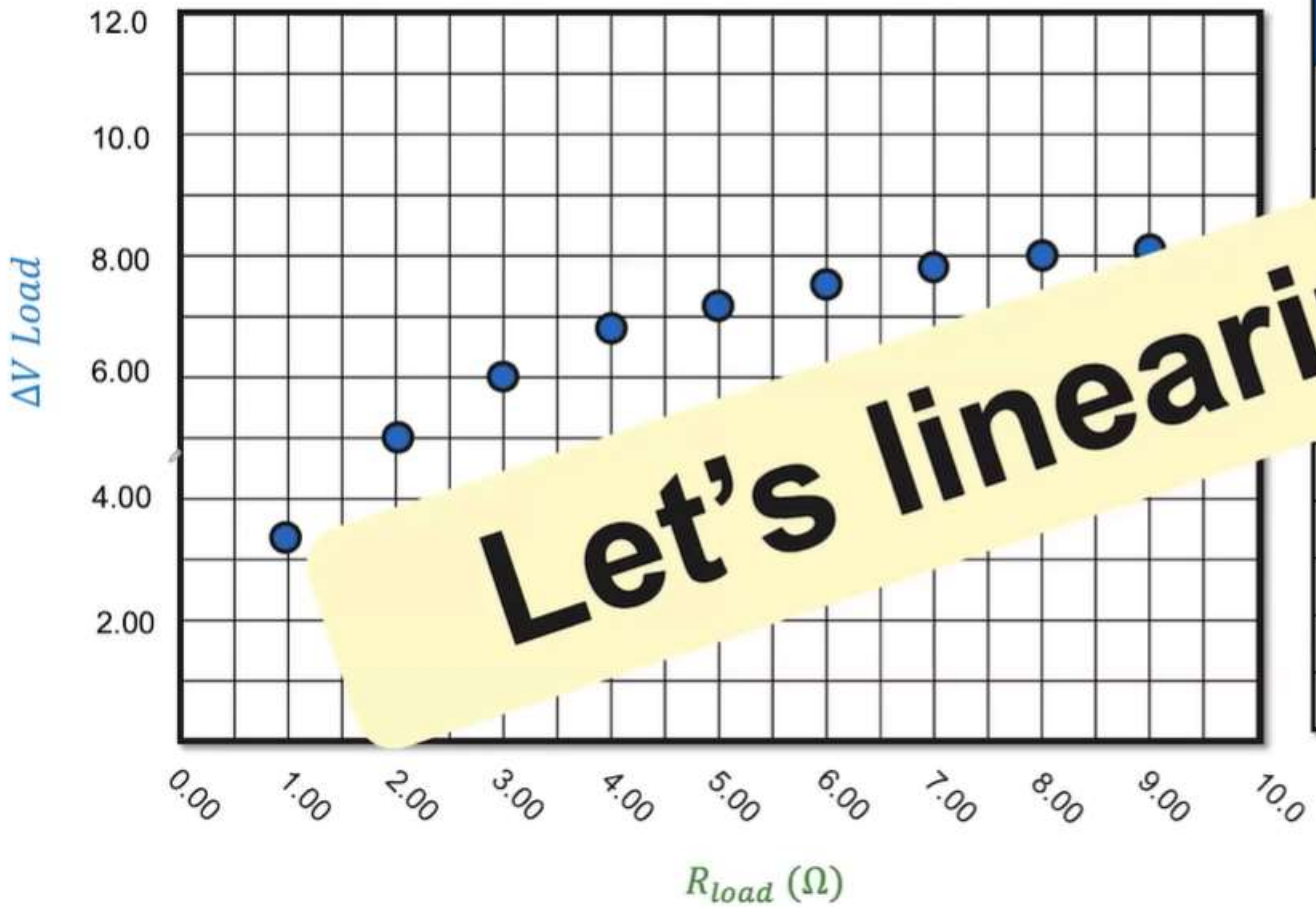


**Let's linearize!**

| Table | |
|---|---|
| $R_{Load}$ | $\Delta V$ Load |
| [illegible] | [illegible] |
| [illegible] | [illegible] |
| [illegible] | 7.14 |
| 6.00 | 7.52 |
| 7.00 | 7.75 |
| 8.00 | 8.00 |
| 9.00 | 8.20 |
| 10.0 | 8.33 |

# How can we experimentally determine if a battery is ideal?

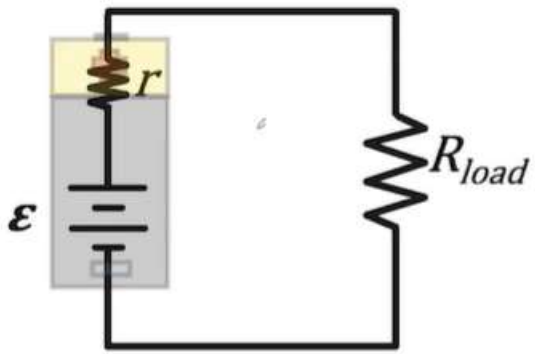


$$R_{eq} = r + R_L$$

$$\varepsilon = I(r + R_L)$$

$$I = \frac{\varepsilon}{r + R_L}$$

# How can we experimentally determine if a battery is ideal?

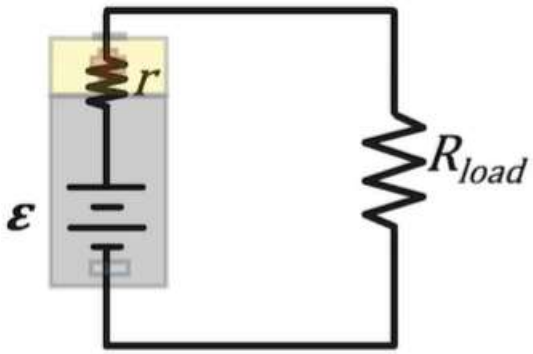


$$R_{eq} = r + R_L$$

$$\varepsilon = I(r + R_L)$$

$$I = \frac{\varepsilon}{r + R_L}$$

$$V_L = I R_L$$

$$V_L = \frac{\varepsilon R_L}{r + R_L}$$

$$V_L = \frac{\varepsilon R_L}{r + R_L}$$

Reciprocal

$$\frac{1}{V_L} = \frac{r + R_L}{\varepsilon R_L}$$

$$\frac{1}{V_L} = \frac{r}{\varepsilon R_L} + \frac{\cancel{R_L}}{\varepsilon \cancel{R_L}}$$

$$\frac{1}{V_L} = \frac{r}{\varepsilon R_L} + \frac{1}{\varepsilon}$$

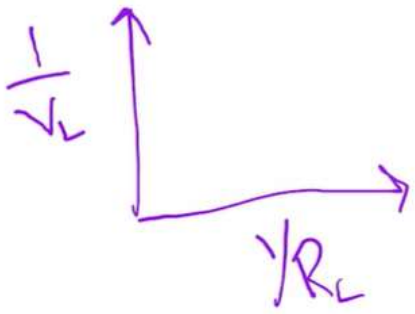


$$\frac{1}{V_L} = \frac{r}{\varepsilon R_L} + \frac{\cancel{R_L}}{\varepsilon \cancel{R_L}}$$

$$\frac{1}{V_L} = \frac{r}{\varepsilon R_L} + \frac{1}{\varepsilon}$$

$$y = mx + b$$

# Experimentally Determining Internal Resistance

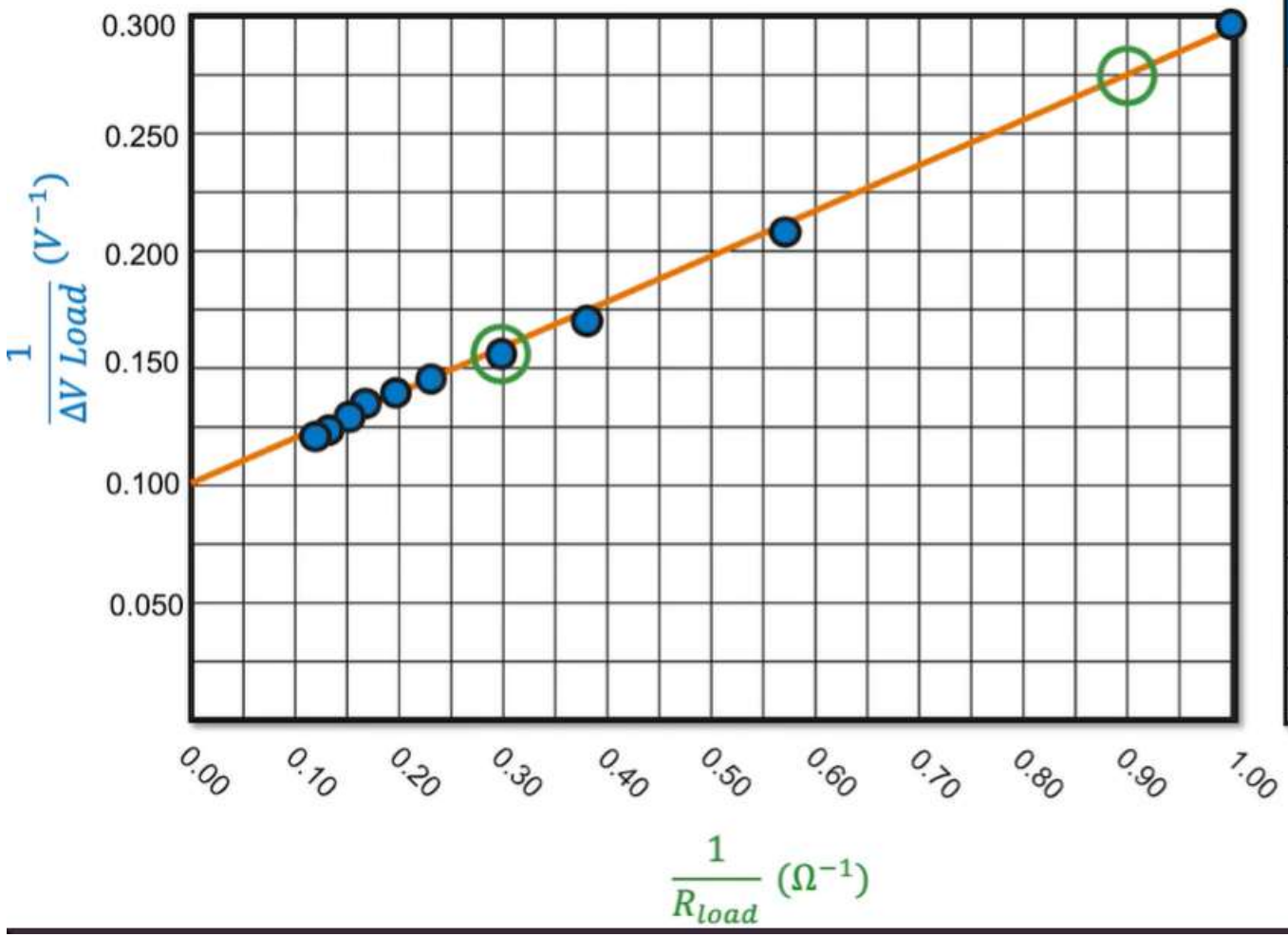


**Table**

| $\frac{1}{R_{Load}}$ | $\frac{1}{\Delta V\ Load}$ |
|---|---|
| 1 | 0.300 |
| 1/2 | 0.200 |
| 1/3 | 0.167 |
| 1/4 | 0.150 |
| 1/5 | 0.140 |
| 1/6 | 0.133 |
| 1/7 | 0.129 |
| 1/8 | 0.125 |
| 1/9 | 0.122 |
| 1/10 | 0.120 |

**Equation**

$$\frac{1}{\Delta V\ Load} = \frac{1}{R_{load}}\frac{R_{int}}{\varepsilon} + \frac{1}{\varepsilon}$$

**Slope**

$$\frac{y_2 - y_1}{x_2 - x_1} = \frac{.275 - .150}{0.90 - 0.25}$$

$$\frac{R_{int}}{\varepsilon} = \frac{0.125}{0.65}$$

$$\frac{R_{int}}{\varepsilon} = 0.192$$

$$R_{int} = 1.92\ \Omega$$

# Takeaways

## Batteries

- Ideal batteries have negligible **INTERNAL** resistance.
- The voltage a battery would supply if it were ideal is the same as the voltage across the terminals of a non-ideal battery with no current flowing.
  - Sometimes called **EMF.**
- Internal resistance can be treated as a regular resistor.
- Terminal voltage **DECREASES** as internal resistance **INCREASES.**

## Wires

- Ideal wires have negligible resistance.
- If a wire is a good conductor, its resistance is much smaller than the load, so is usually neglected.
  - It can **ONLY** be neglected if there is a load!

# 11.5.3

Ammeters and Voltmeters

-What makes them ideal

-How are they connected in a circuit

# Ammeter:

## A tool used to measure current at a specific point in a circuit.

### How to connect an Ammeter

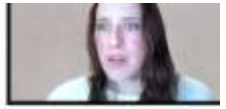

Ammeters must be connected in **series** with the element in which current is being measured.

Ideal ammeters have **zero resistance** so that they do not affect the current in the element that they are in series with!

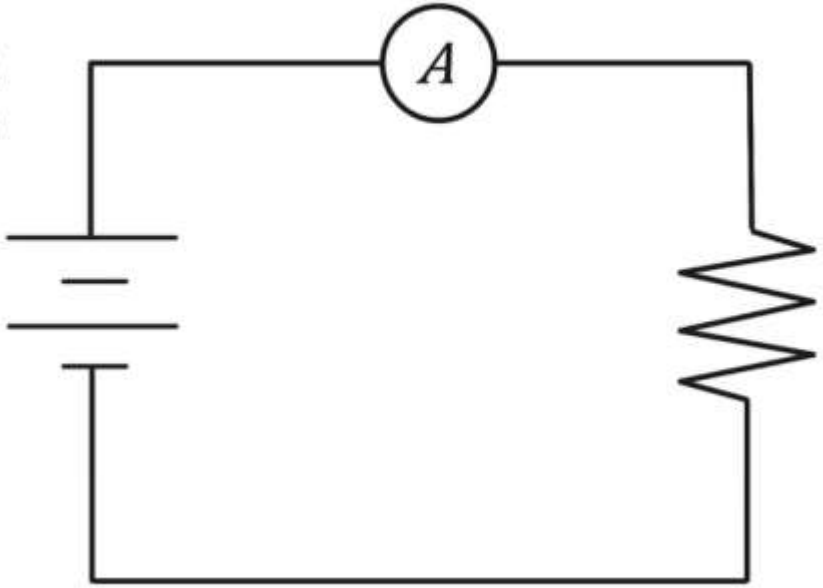

# How should we connect the Ammeter to measure the current through $R_1$?

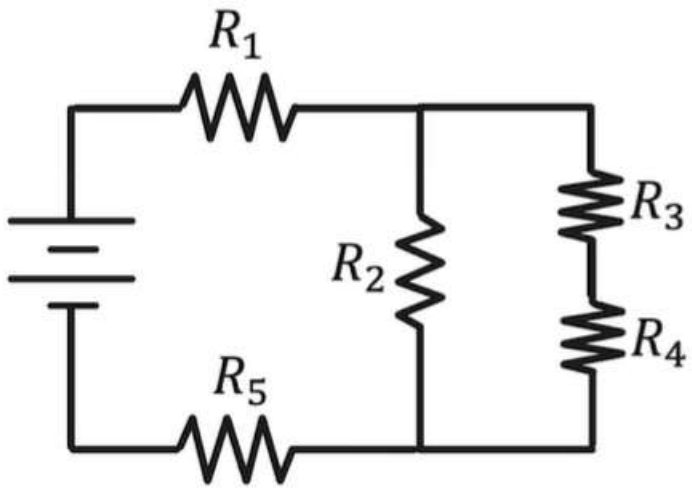


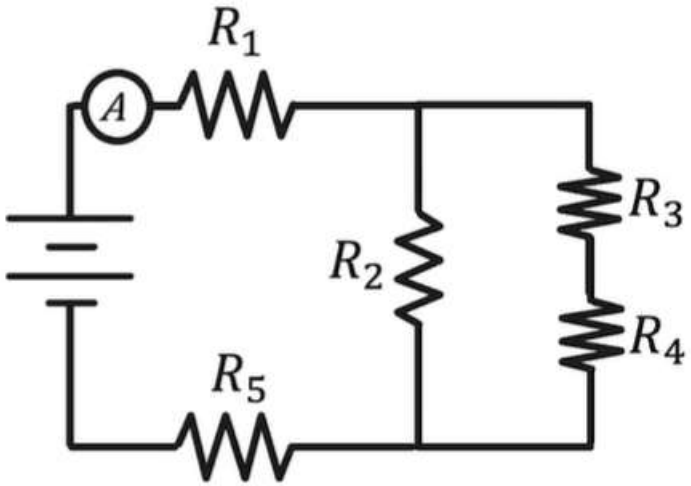

# Voltmeter:

**A tool used to measure electric potential difference (voltage) between two points in a circuit.**

## How to connect a Voltmeter

Voltmeters must be connected in **parallel** with the element across which voltage is being measured.

Ideal voltmeters have **infinite resistance** so that no charge flows through them!

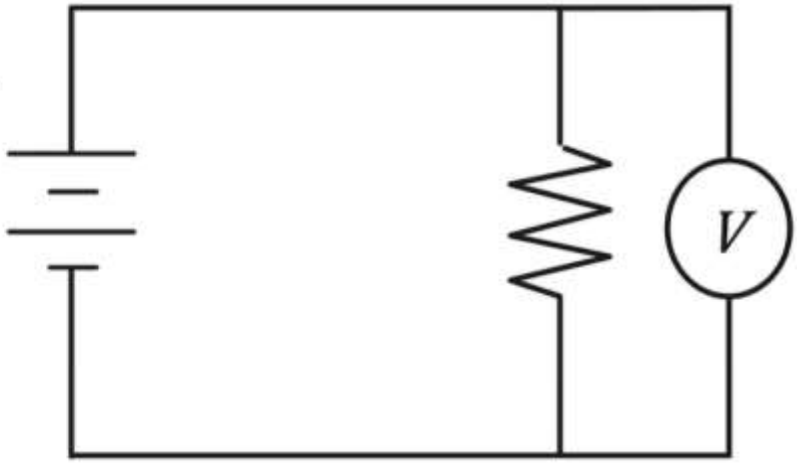

# How should we connect the Voltmeter to measure the voltage across $R_4$?

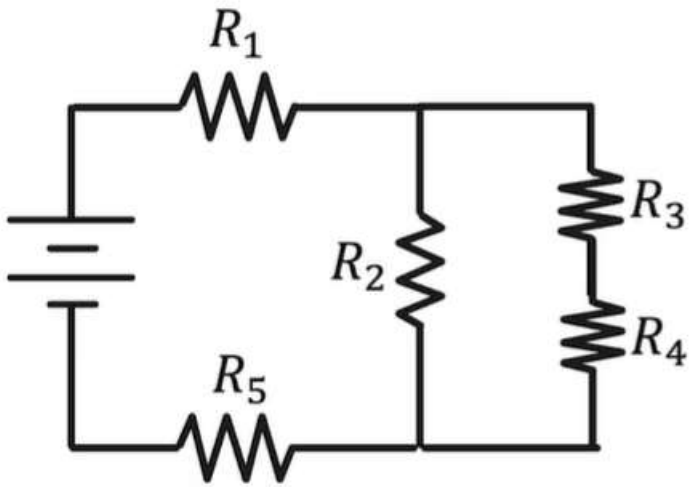


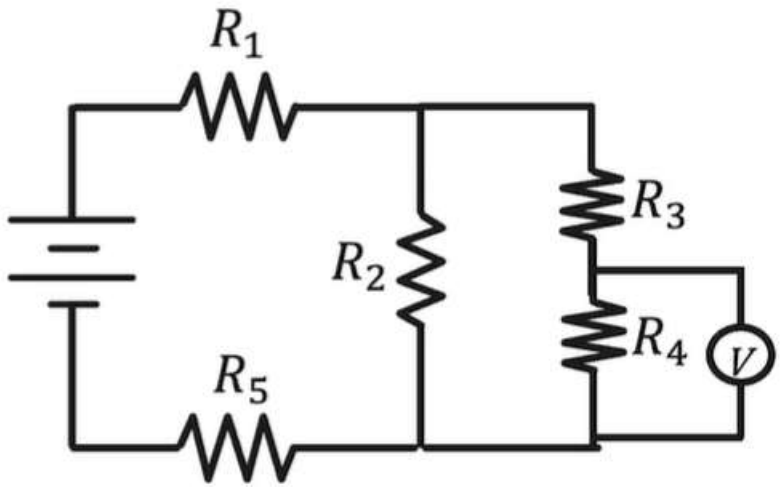

DURACELL
DURACELL
DURACELL

00.0
DCV
1000
OFF
750
ACV
DCA
200
20
2000 m
200 m
2000k
200k
20k
2000
200
Ω
hFE
200µ
2000 µ
20m
200m
10A
E
B
C
NPN
PNP
CE
10ADC
10Amax unfused
VΩmA
750VAC
1000VDC
200mA max
CAT II
500Vmax
COM
NP-2702-D
DIGITAL
MULTIMETER

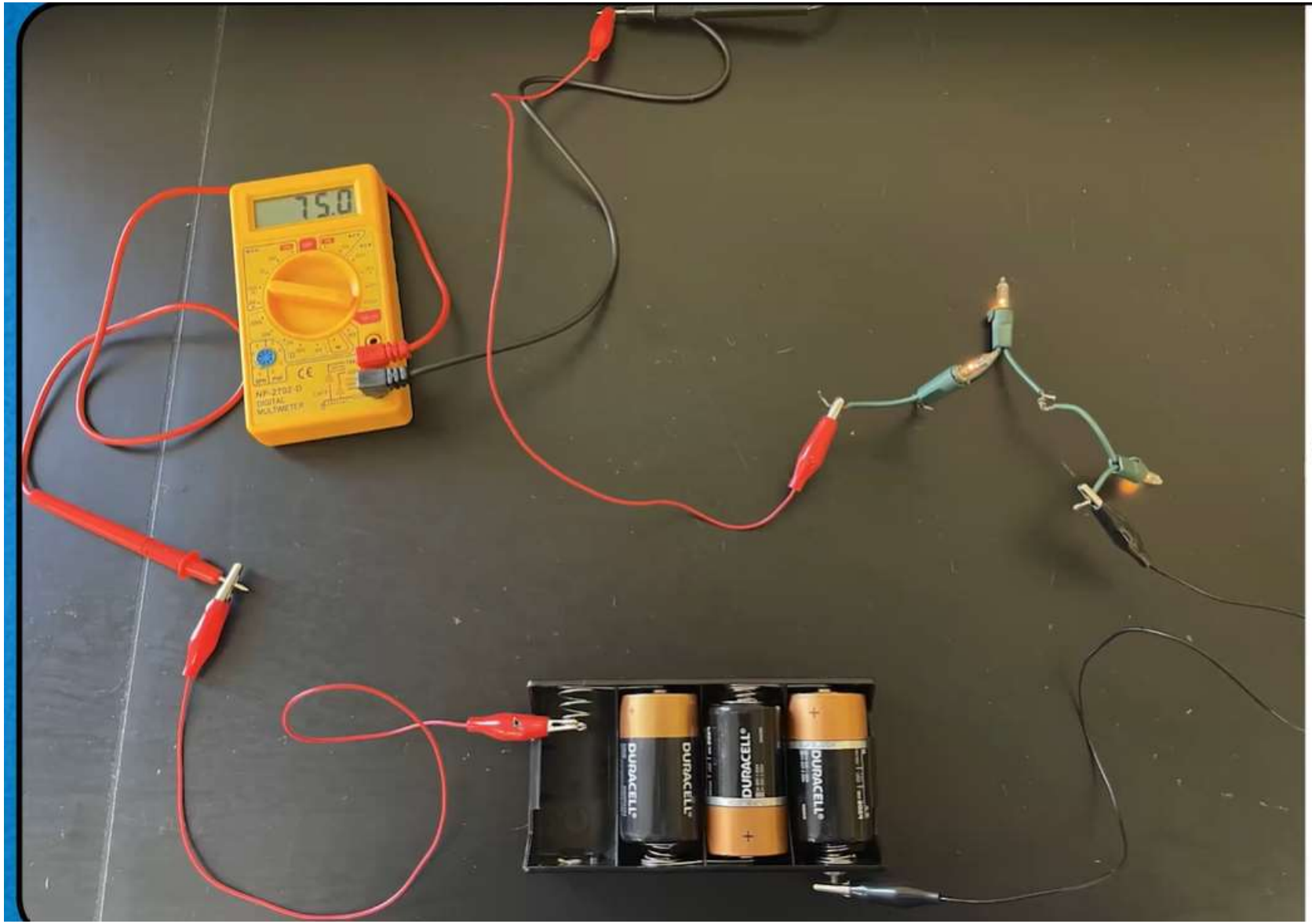
75.0
DURACELL
DURACELL
DURACELL

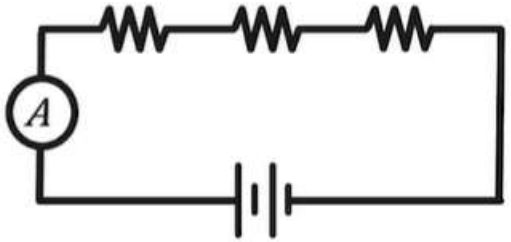
A

0.00
DCV
OFF
ACV
DCA
10A
NPN
PNP
10ADC
VΩmA
COM
NP-2702-D
DIGITAL
MULTIMETER

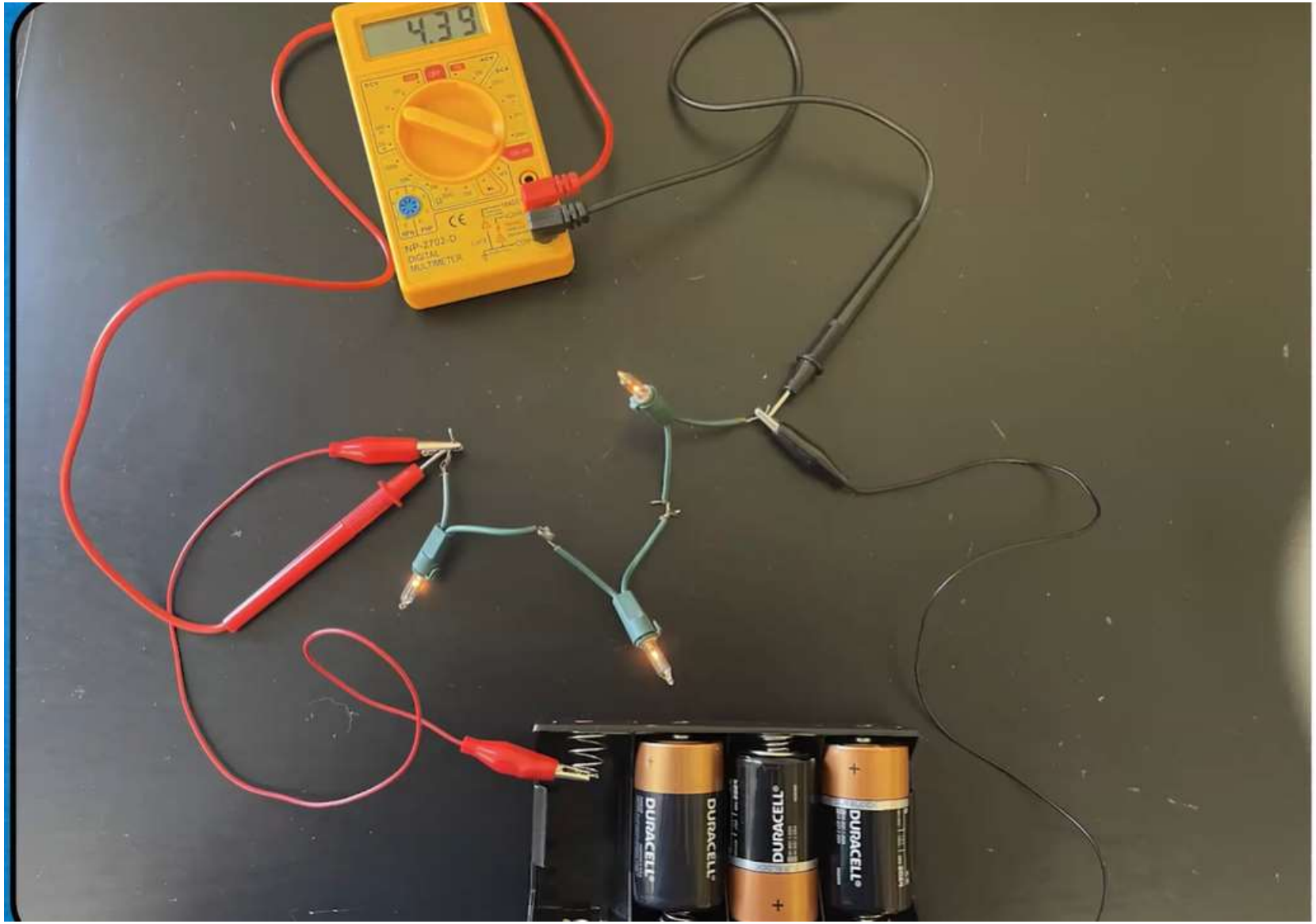
4.39
NP-2702-D
DIGITAL
MULTIMETER
DURACELL
DURACELL
DURACELL

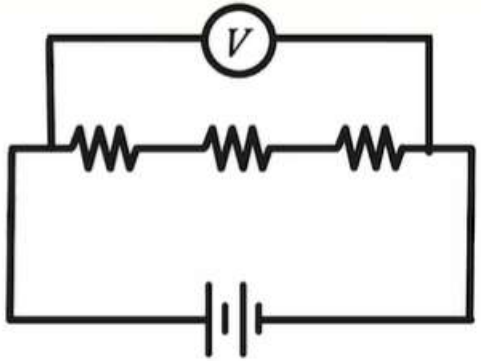
V

# Takeaways

| Ammeters | Voltmeters |
| --- | --- |
| • Measure current | • Measure potential difference (Voltage) |
| • Connected in **series** | • Connected in **parallel** |
| • Ideally **zero** resistance | • Ideally **infinite** resistance |

## Takeaways

**Non-ideal ammeters and voltmeters will change the properties of the circuit being measured!**